# Ultra-Sense Lavatory Faucet S-6080 (pre-2011)

*Complete Faucet NLA

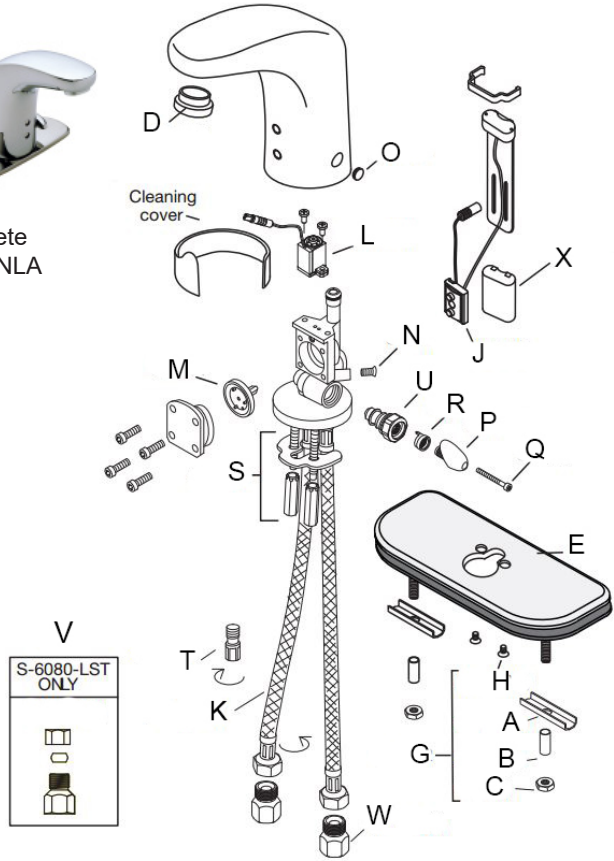


| | | |
|---|---|---|
| A | NLA | Anchor Bar (2) |
| B | NLA | Mounting Spacer (2) |
| C | 99180036 | Nut (2) |
| D | 99091986 | 1.5 GPM Aerator |
| E | 99381529 | Deck Plate |
| F | 99344780 | Gasket |
| G | 99344781 | Mounting Kit (H(2), A(2), B(2), C(2)) |
| H | 99344781 | Mounting Screws (2) |
| J | 99521597 | Sensor Repair Kit |
| K | 99344782 | Supply Hoses (2) |
| L | 99360252 | Pilot Valve Repair Kit (New) |
| M | 99091984 | Solenoid Valve Membrane |
| N | 99381534 | Housing Screw |
| O | 99344783 | Handle Plug Button |
| P | 99344784 | Handle |
| Q | 99381533 | Handle Screw |
| R | NLA | Handle Limit Stop |
| S | 99273908 | Single Mount Kit |
| T | 99344786 | Plug |
| U | 99343890 | Mixer |
| V | 99381530 | Check Strainer Assembly (Pair) |
| W | 99287919 | Check Strainer Kit (2) |
| X | 99030168 | 6V Lithium Battery |